Toll Free Phone: 800.263.7011
Toll Free Fax: 800.459.6227

Toll Free Phone: 800.361.3773
Fax: 905.625.9481

Technical Drawing

Part / Pièce #
13941
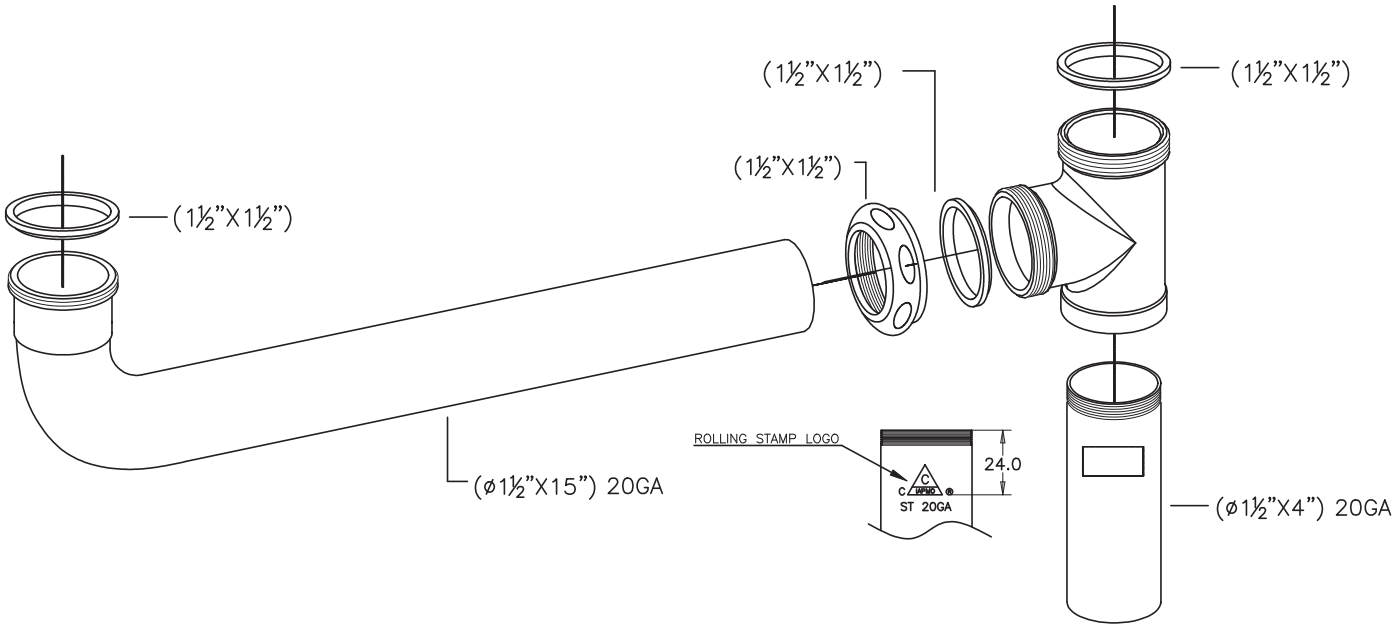
APPROVAL LOGO
C IAPMO TM ST 20GA